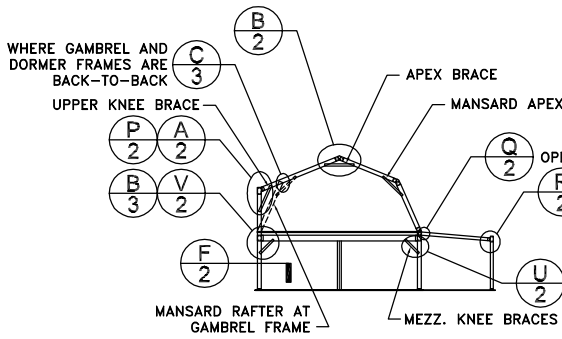

NOTE: SEE DETAIL K/2 FOR CLEARSPAN FRAME COLUMN AND RAFTER FLYBRACING REQUIREMENTS.

TYP. CROSS-SECTION AT DORMER FRAME

SCALE: NO SCALE

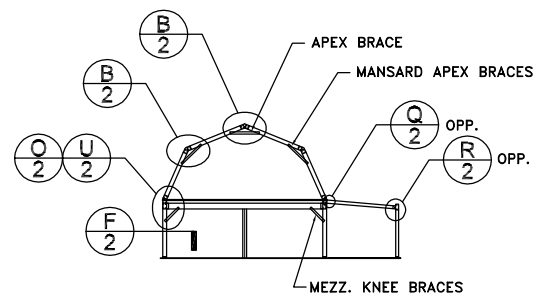

NOTE: SEE DETAIL K/2 FOR CLEARSPAN FRAME COLUMN AND RAFTER FLYBRACING REQUIREMENTS.

TYP. CROSS-SECTION AT GAMBREL FRAME

SCALE: NO SCALE

MEMBER AND MATERIAL SCHEDULE

1	C.S. Frame Rafter	Double 8in 12G CEE
2	C.S. Frame Column	Double 8in 12G CEE
3	C.S. Frame Upper Knee Brace	Double 4in 16G CEE
4	# of Upper Knee Brace Bolts	2
5	C.S. Frame Apex Brace	Double 4in 16G CEE
6	C.S. Frame Mansard Apex Braces	Double 4in 16G CEE
7	# of Apex Brace Bolts	2
8	Main Bldg. Endwall Rafters	Single 8in 12G CEE
9	Main Bldg. Corner Columns	Single 8in 12G CEE
10	Leanto B Frame Rafter	Double 6in 16G CEE
11	Leanto B Frame Column	Double 6in 16G CEE
12	Leanto B Endwall Rafters	Single 6in 16G CEE
13	Leanto B Corner Columns	Single 6in 16G CEE
14	Main Bldg. Endwall Columns	Single 10in 12G CEE
15	Concrete Anchors (# per dets.)	Powers 1/2in x 4in Long 'Wedge-Bolt+' in 4.5" Hole
16	Anchor Installation Special Inspection	Req'd. in accordance with ch. 17 of the bldg. code
17	Main Building Roof Purlin	4in 16G LGSI ZEE
18	Main Bldg. Roof Purlin Spacing	3'-4 1/8" Max.
19	Main Bldg. Mansard Purlin Spacing	4'-4 3/4" Max.
20	Leanto B Roof Purlin	4in 16G LGSI ZEE
21	Leanto B Eave Purlin	4in 16G EAVE STRUT
22	Leanto B Purlin Spacing (from top)	(4) spaces at 2'-0 1/16", (1) at 4'-0 3/16"
23	Main Building Sidewall Girt	4in 16G LGSI ZEE
24	Main Bldg. Sidewall Girt Spacing	5'-0" Max.
25	Main Building Endwall Girt	4in 16G LGSI ZEE
26	Main Bldg. Endwall Girt Spacing	4'-10 3/16" Max.
27	Roof and Sidewall X-bracing Strap	Single 2in 16G Strap
28	Mezzanine Girders	12in 14G CEE (Single or Double per Plan)
29	Mezzanine Knee Brace	Double 4in 16G CEE
30	# of Mezzanine Knee Brace Bolts	2
31	Mezzanine Joists	6in 16G LGSI ZEE

"C.S." = CLEARSPAN
"U.N.O." = UNLESS NOTED OTHERWISE

STRUCTURAL GENERAL NOTES

1. GOVERNING CODE: 2009 INTERNATIONAL BUILDING CODE

2. DRAWING OWNERSHIP:
THESE DRAWINGS ARE JOINTLY OWNED BY OUTBACK STEEL BUILDINGS AND ASK4 ENGINEERING, INC. (ASK4). DRAWINGS ARE PROVIDED FOR SOLE PURPOSE OF OBTAINING BUILDING PERMITS. ENGINEERING SEAL IS VALID FOR THE CONSTRUCTION OF A SINGLE BUILDING AT THE JOB ADDRESS SHOWN IN DRAWING TITLEBLOCK. ANY OTHER USE OF THESE DRAWINGS WITHOUT WRITTEN AUTHORIZATION FROM OUTBACK AND ASK4 IS PROHIBITED.

3. DRAWING SEAL REQUIREMENTS:
THESE DRAWINGS ARE NOT VALID UNLESS SEAL IS WET SIGNED BY THE ENGINEER. ALL COPIES SHALL BEAR WET SIGNATURE OF ENGINEER. IF A COPY OF THESE DRAWINGS IS DISTRIBUTED WITHOUT THE PROPER WET SIGNATURE, THE DRAWING IS CONSIDERED INVALID. THE DUPLICATION OR COPYING OF THIS DRAWING COULD MEAN THAT THE CONTENT OF THE ORIGINAL DRAWING HAS BEEN MODIFIED. THE ENGINEER ACCEPTS NO LIABILITY OR RESPONSIBILITY FOR DRAWINGS WITHOUT A WET SIGNATURE. WET SIGNED DRAWINGS ARE SIGNED IN RED INK FOR EASE OF DETERMINING VALIDITY OF SIGNATURE.

4. CONTRACTOR RESPONSIBILITIES:
CONTRACTOR SHALL VERIFY AND CONFIRM ALL EXISTING CONDITIONS AND DIMENSIONS. ASK4 ENGINEERING, INC. (ENGINEER) SHALL BE NOTIFIED OF ANY DISCREPANCIES BETWEEN DRAWINGS AND EXISTING CONDITIONS PRIOR TO START OF WORK.
CONTRACTOR MUST SUBMIT IN WRITING ANY REQUEST FOR MODIFICATION TO THE PLANS AND/OR SPECIFICATIONS AND NO STRUCTURAL CHANGES FROM THE APPROVED PLANS SHALL BE MADE IN THE FIELD UNLESS, PRIOR TO MAKING CHANGES, WRITTEN APPROVAL IS OBTAINED FROM THE ENGINEER. SHOP DRAWINGS SUBMITTED TO THE ENGINEER FOR REVIEW DO NOT CONSTITUTE "IN WRITING" UNLESS IT IS NOTED THAT SPECIFIC CHANGES ARE BEING REQUESTED. IF CHANGES ARE MADE WITHOUT WRITTEN APPROVAL, SUCH CHANGES SHALL BE THE LEGAL AND FINANCIAL RESPONSIBILITY OF THE CONTRACTOR OR SUB-CONTRACTORS INVOLVED AND IT SHALL BE THEIR FULL RESPONSIBILITY TO REPLACE OR REPAIR THE CONDITION AS DIRECTED BY THE ENGINEER.
CONTRACTOR SHALL PROVIDE ALL TEMPORARY BRACING, SHORING, GUYING, OR OTHER MEANS TO AVOID EXCESSIVE STRESSES AND TO HOLD STRUCTURAL ELEMENTS IN PLACE DURING ERECTION. THESE TEMPORARY PROVISIONS SHALL REMAIN IN PLACE UNTIL SUFFICIENT PERMANENT MEMBERS ARE ERECTED TO INSURE THE SAFETY OF PARTIALLY ERECTED STRUCTURES. CONTRACTOR IS RESPONSIBLE FOR MEETING ALL LAWS REGULATING THE ERECTION OF STEEL BUILDINGS.
THESE STRUCTURAL DRAWINGS AND SPECIFICATIONS REPRESENT THE FINISHED STRUCTURE. BUILDING IS NOT CONSIDERED COMPLETE UNTIL THE INSTALLATION OF ALL COMPONENTS AND DETAILS SHOWN HEREIN ARE INSTALLED ACCORDING TO THE DRAWINGS.

5. ENGINEERING:
THE SUPPLYING OF STAMPED ENGINEERING CALCULATIONS AND DRAWINGS FOR THIS METAL BUILDING DOES NOT IMPLY OR CONSTITUTE AN AGREEMENT THAT ASK4 ENGINEERING, INC. IS ACTING AS THE ENGINEER OR ARCHITECT OF RECORD OR THE DESIGN PROFESSIONAL IN RESPONSIBLE CHARGE FOR THE WHOLE OF THE PROJECT.
THIS BUILDING HAS BEEN REVIEWED BY ASK4 ENGINEERING, INC. FOR CONFORMITY ONLY TO THE STRUCTURAL DESIGN PORTIONS OF THE GOVERNING CODE. THE BUILDING OWNER IS RESPONSIBLE TO SEEK PROFESSIONAL ADVICE IN ADDRESSING ANY OTHER CODE REQUIREMENTS (INCLUDING, BUT NOT LIMITED TO, FIRE AND LIFE SAFETY, ENVIRONMENTAL, ACCESSIBILITY, OR ELECTRICAL) THAT MAY APPLY TO THIS PROJECT.
DRAWINGS SCALES INDICATED ON DRAWINGS ARE APPROXIMATE AND INTENDED TO BE USED FOR REFERENCE ONLY. DO NOT SCALE DRAWINGS FOR CONSTRUCTION PURPOSES.
THESE DOCUMENTS ARE STAMPED ONLY AS TO THE COMPONENTS FURNISHED BY OUTBACK BUILDINGS. IT IS THE RESPONSIBILITY OF THE PURCHASER TO COORDINATE DRAWINGS PROVIDED BY ASK4 ENGINEERING, INC. WITH OTHER PLANS AND/OR OTHER COMPONENTS THAT ARE PART OF THE OVERALL PROJECT. IN CASES OF DISCREPANCIES, DRAWINGS PROVIDED BY OUTBACK BUILDINGS SHALL GOVERN.
THE UNDERSIGNED ENGINEER WILL NOT SUPERVISE THE FABRICATION OR ERECTION OF THIS STRUCTURE. ANY OBSERVATION VISITS TO THE PROJECT SITE BY THE UNDERSIGNED ENGINEER ARE NOT TO BE CONSTRUED AS BEING INSPECTIONS FOR THE CONSTRUCTION OF ANY COMPONENT OF THIS BUILDING.

6. INSPECTIONS:
EXCEPT IF NOTED IN MEMBER SCHEDULE TO LEFT, NO SPECIAL INSPECTIONS ARE REQUIRED BY THE GOVERNING CODE ON THIS JOB. ALL SPECIAL INSPECTIONS AND ANY OTHER ADDITIONAL INSPECTIONS REQUESTED BY BUILDING DEPARTMENT SHALL BE AT OWNER'S EXPENSE.

7. SOIL REQUIREMENTS:
ALLOWABLE SOIL BEARING VALUE INDICATED ON DRAWING SHEET 1 OCCURS AT 12" BELOW FINISH GRADE, OR EXISTING NATURAL GRADE, OR AT FROST DEPTH SPECIFIED BY BUILDING DEPARTMENT, WHICHEVER IS THE LOWEST ELEVATION. FOUNDATION DESIGN SHOWN ASSUMES BOTTOM OF FOOTING BEARS ON NATIVE SOILS.
FOUNDATION DESIGN SHOWN DOES NOT ACCOUNT FOR EXPANSIVE SOIL CONDITIONS OR FOR CONCRETE THAT WILL BE EXPOSED TO SULFATE CONTAINING SOLUTIONS OR CHLORIDES. OWNER SHALL CONTACT ENGINEER PRIOR TO CONSTRUCTION IF ANY OF THESE CONDITIONS EXIST.

8. CONCRETE REQUIREMENTS:
ALL CONCRETE SHALL HAVE A MIN. 28-DAY STRENGTH OF 2500 psi. HIGHER STRENGTH CONCRETE MAY BE USED, AT OWNER'S DISCRETION, FOR FINISH AND DURABILITY PURPOSES. CEMENT SHALL COMPLY WITH ASTM C150, TYPE 2, AND SHALL CONTAIN NO FLYASH.
ALL CONCRETE PLACEMENT SHALL BE PERFORMED IN ACCORDANCE WITH ACI STANDARD 301-05, "SPECIFICATIONS FOR STRUCTURAL CONCRETE FOR BUILDINGS", WHICH IS HEREBY MADE A PART OF THESE DOCUMENTS.
CONCRETE REINFORCING SHALL CONFORM TO ASTM A615, GRADE 60 FOR #4 BARS AND LARGER, GRADE 40 FOR #3 BARS. WELDED WIRE MESH SHALL CONFORM TO ASTM A185 (Fy MIN. OF 70 ksi). ALL FOOTING REINFORCING BARS TO BE CONTINUOUS AROUND CORNERS. LAP SPLICE FOOTING REINFORCING MIDWAY BETWEEN COLUMNS AND MULLIONS. ALL LAP SPLICES TO BE 48 BAR DIAMETERS MIN., U.N.O.
CONCRETE GRADE BEAMS, THICKENED SLAB EDGES, PIERS, AND SPREAD FOOTINGS SHALL BE POURED ONTO UNDISTURBED, NATIVE SOIL WHICH IS FREE FROM ANY MATERIAL THAT WILL ADVERSELY AFFECT THE MIN. ALLOWABLE SOIL BEARING PRESSURE SPECIFIED ON SHEET 1.

9. STRUCTURAL STEEL REQUIREMENTS:
ALL STRUCTURAL STEEL SHALL CONFORM TO ASTM A36 (Fy MIN. OF 36000 psi), U.N.O. ALL BOLTS SHALL CONFORM TO ASTM A307, U.N.O. BOLT HOLE DIAMETERS SHALL BE 1/16" LARGER THAN NOMINAL BOLT DIAMETER. ALL INSTALLATION SHALL BE IN ACCORDANCE WITH AISC "CODE OF STANDARD PRACTICE". CAST-IN-PLACE ANCHOR BOLTS, IF SPECIFIED, MAY BE EITHER J-BOLTS WITH STD. BEND OR A THREADED ROD WITH A FULLY ENGAGED NUT. EMBEDMENT SPECIFIED ON DRAWINGS SHALL BE MEASURED FROM TOP OF J-BOLT BEND OR THREADED ROD NUT.
NO WELDING IS REQUIRED ON THIS JOB.

10. LIGHT GAUGE STRUCTURAL STEEL REQUIREMENTS:
ALL LIGHT GAUGE STEEL FRAMING MATERIAL AND ERECTION SHALL BE IN ACCORDANCE WITH THE LATEST EDITION OF THE AMERICAN IRON AND STEEL INSTITUTE (AISI) "NORTH AMERICAN SPECIFICATION FOR THE DESIGN OF COLD-FORMED STEEL STRUCTURAL MEMBERS".
ALL LIGHT GAUGE STEEL MATERIAL SHALL CONFORM TO ASTM A570, GRADE 55, HAVING A MINIMUM YIELD STRENGTH OF 55000 psi. THE GRADE AND ASTM SPECIFICATION NUMBER SHALL BE INDICATED BY PAINTING, DECAL, TAGGING, OR OTHER SUITABLE MEANS, ON EACH LIFT OR BUNDLE OF FABRICATED ELEMENTS.
UNLESS NOTED, 4" DEEP CEE MEMBERS SHALL HAVE MIN. 2.5" WIDE FLANGES. ALL OTHER CEE MEMBERS SHALL HAVE MIN. 4" WIDE FLANGES. ALL ZEE MEMBERS SHALL HAVE MIN. 2.5" WIDE FLANGES. FLANGE STIFFENER LIPS SHALL BE .885" FOR 12G CEES, .800" FOR 14G CEES, .768" FOR 16G CEES, .708" FOR 12G ZEES, .680" FOR 14G ZEES, AND .658" FOR 16G ZEES. ALL BEND RADIUSES SHALL BE .1875"
DECIMAL THICKNESSES OF LIGHT GAUGE STEEL MATERIAL, ACCORDING TO NOMINAL GAUGES, SHALL MEET OR EXCEED THE FOLLOWING:

GAUGE NO.	DECIMAL THICKNESS, IN.	GAUGE NO.	DECIMAL THICKNESS, IN.	GAUGE NO.	DECIMAL THICKNESS, IN.	RT OF
12	0.105	16	0.057	20	0.036	
14	0.070	18	0.048			

EXCEPT AS SHOWN ON DRAWINGS, CEE COLUMN AND RAFTER MEMBERS SHALL NOT BE DRILLED OR NOTCHED WITHOUT PRIOR APPROVAL OF THE ENGINEER. DOOR JAMB, ROOF PURLIN, AND WALL GIRT ENDS MAY HAVE FLANGES COPED 3" MAX. IF CONNECTION IS MADE TO PERPENDICULAR MEMBER PER DETAIL E/2. ROUND HOLES MAY BE DRILLED THROUGH ANY MEMBER WITHIN THE MIDDLE THIRD OF THE DEPTH OF THAT MEMBER (NO HOLES WITHIN 24" OF ANY MEMBER END OR KNEE OR APEX BRACE).
ALL BOLTS USED TO CONNECT LIGHT GAUGE MATERIAL SHALL CONFORM TO ASTM A307. BOLTS SHALL BE SPACED NO LESS THAN 3 BOLT DIAMETERS BETWEEN CENTERS. DISTANCE FROM BOLT CENTER TO THE END OR EDGE OF ANY LIGHT GAUGE MEMBER SHALL BE A MIN. OF 1.5 BOLT DIAMETERS. ALL SCREWS USED TO CONNECT LIGHT GAUGE MATERIAL SHALL BE SELF-DRILLING SCREWS AND SHALL HAVE A MIN. TENSILE BREAKING STRENGTH OF 100,000 psi. SCREWS SHALL BE SPACED NO LESS THAN 1" O.C. AND EDGE OR END DISTANCE SHALL NOT BE LESS THAN 1". UNLESS NOTED OTHERWISE, ALL REFERENCES TO "SCREWS" CONNECTING MATERIAL THICKER THAN 20 ga. SHALL BE #14 SCREWS AND SHALL HAVE 14 THREADS PER INCH.
SCREW ROOT DIAMETERS SHALL NOT BE LESS THAN:
#14 SCREW: .200" #12 SCREW: .177" #10 SCREW: .153"

11. STEEL ROOF AND WALL PANELS (CLADDING):
LIGHT GAUGE STEEL ROOF AND WALL PANELS SHALL CONFORM TO ASTM A653 AND THE STEEL DECK INSTITUTE SPECIFICATIONS AND HAVE A MIN. YIELD STRENGTH OF 80000 psi.
DECIMAL THICKNESSES, ACCORDING TO NOMINAL GAUGES, SHALL MEET OR EXCEED THE FOLLOWING:

GAUGE NO.	DECIMAL THICKNESS, IN.	GAUGE NO.	DECIMAL THICKNESS, IN.	GAUGE NO.	DECIMAL THICKNESS, IN.
22	0.0299	26	0.0179	29	0.0135
24	0.0239	28	0.0149	30	0.0120

SEE DETAILS H/2 AND I/2 FOR ROOF AND WALL PANEL FASTENER TYPES AND SPACINGS.

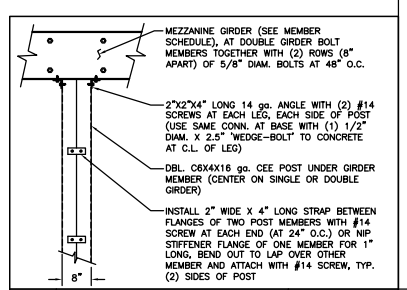

T | MEZZANINE POST CONNECTION | DWG NO MZC20

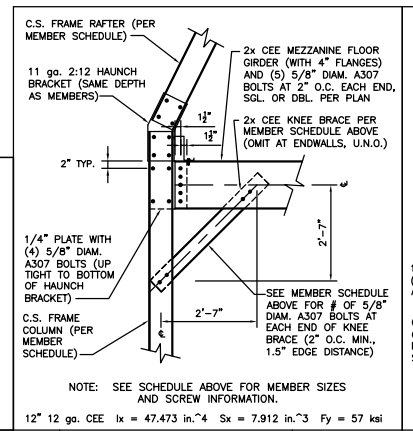

NOTE: SEE SCHEDULE ABOVE FOR MEMBER SIZES AND SCREW INFORMATION.
12" 12 ga. CEE Ix = 47.473 in.^4 Sx = 7.912 in.^3 Fy = 57 ksi

V | MEZZANINE GIRDER CONNECTION | DWG NO MZGGB15

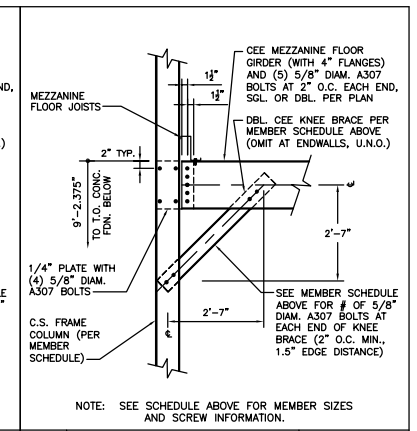

NOTE: SEE SCHEDULE ABOVE FOR MEMBER SIZES AND SCREW INFORMATION.

V | MEZZANINE GIRDER CONNECTION | DWG NO MZG15B-KB

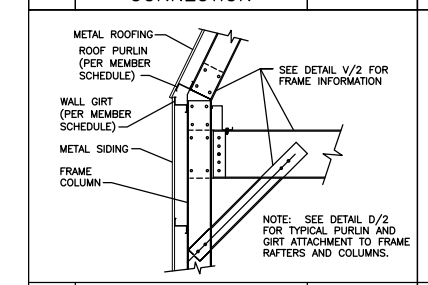

O | GAMBREL EAVE SECTION | DWG NO GEM44

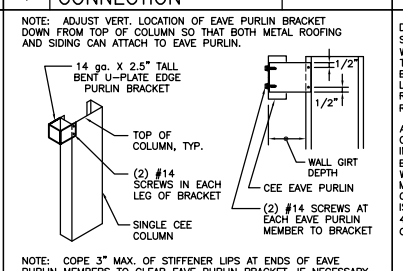

NOTE: ADJUST VERT. LOCATION OF EAVE PURLIN BRACKET DOWN FROM TOP OF COLUMN SO THAT BOTH METAL ROOFING AND SIDING CAN ATTACH TO EAVE PURLIN.
NOTE: COPE 3" MAX. OF STIFFENER LIPS AT ENDS OF EAVE PURLIN MEMBERS TO CLEAR EAVE PURLIN BRACKET, IF NECESSARY.

P | EAVE PURLIN BRACKET | DWG NO EPB41

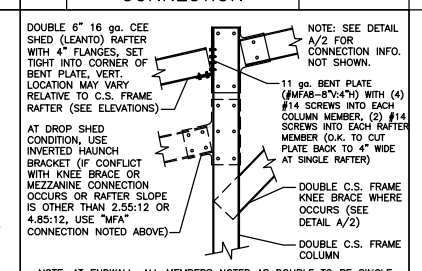

NOTE: AT ENDWALL, ALL MEMBERS NOTED AS DOUBLE TO BE SINGLE.

Q | RAFTER CONNECTION | DWG NO LT20

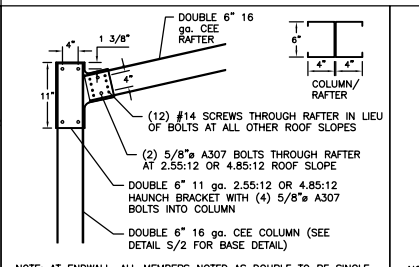

NOTE: AT ENDWALL, ALL MEMBERS NOTED AS DOUBLE TO BE SINGLE.

R | HAUNCH CONNECTION | DWG NO H20LT

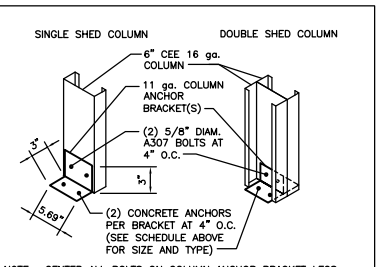

NOTE: CENTER ALL BOLTS ON COLUMN ANCHOR BRACKET LEGS.

S | SHED (LEANTO) BASE CONNECTION | DWG NO BC20LT

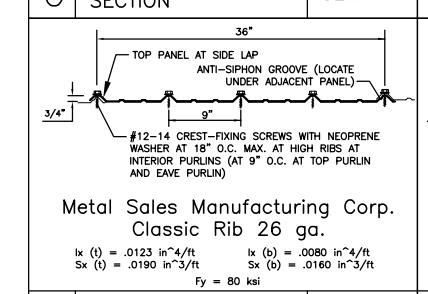

Metal Sales Manufacturing Corp.
Classic Rib 26 ga.
Ix (t) = .0123 in^4/ft Ix (b) = .0080 in^4/ft
Sx (t) = .0190 in^3/ft Sx (b) = .0160 in^3/ft
Fy = 80 ksi

H | ROOF PANEL | DWG NO R1

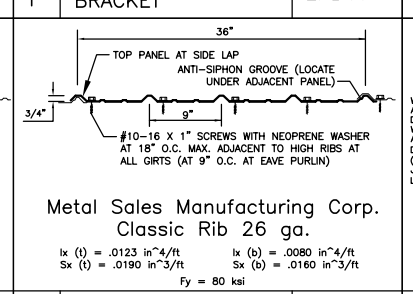

Metal Sales Manufacturing Corp.
Classic Rib 26 ga.
Ix (t) = .0123 in^4/ft Ix (b) = .0080 in^4/ft
Sx (t) = .0190 in^3/ft Sx (b) = .0160 in^3/ft
Fy = 80 ksi

I | WALL PANEL | DWG NO W1

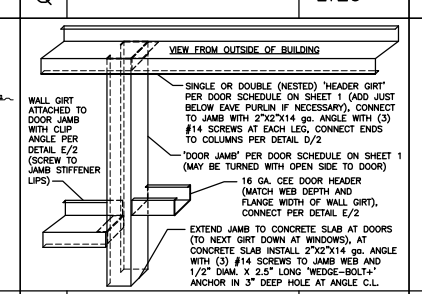

J | TYPICAL DOOR & WINDOW FRAMING | DWG NO DFR

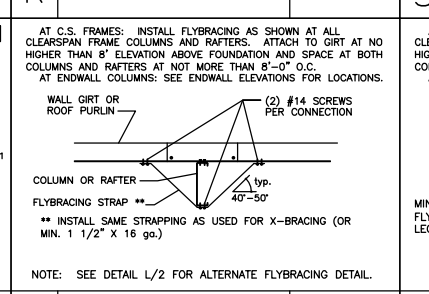

AT C.S. FRAMES: INSTALL FLYBRACING AS SHOWN AT ALL CLEARSPAN FRAME COLUMNS AND RAFTERS. ATTACH TO GIRT AT NO HIGHER THAN 8' ELEVATION ABOVE FOUNDATION AND SPACE AT BOTH COLUMNS AND RAFTERS AT NOT MORE THAN 8'-0" O.C.
AT ENDWALL COLUMNS: SEE ENDWALL ELEVATIONS FOR LOCATIONS.
NOTE: SEE DETAIL L/2 FOR ALTERNATE FLYBRACING DETAIL.

K | FLYBRACING DETAIL | DWG NO FBR

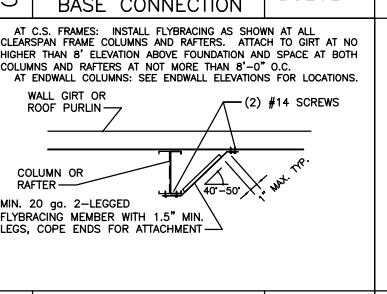

AT C.S. FRAMES: INSTALL FLYBRACING AS SHOWN AT ALL CLEARSPAN FRAME COLUMNS AND RAFTERS. ATTACH TO GIRT AT NO HIGHER THAN 8' ELEVATION ABOVE FOUNDATION AND SPACE AT BOTH COLUMNS AND RAFTERS AT NOT MORE THAN 8'-0" O.C.
AT ENDWALL COLUMNS: SEE ENDWALL ELEVATIONS FOR LOCATIONS.

L | ALTERNATE FLYBRACING DETAIL | DWG NO FBC

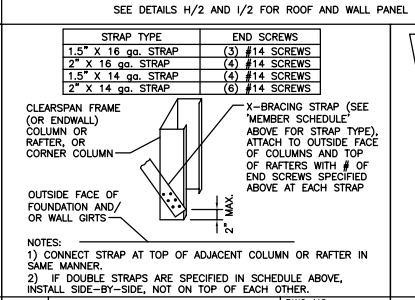

M | ROOF & WALL X-BRACING CONNECTION | DWG NO SB1

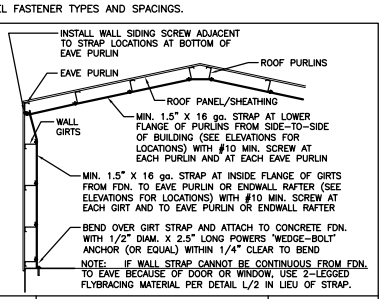

N | GIRT AND PURLIN FLANGE BRACING | DWG NO PGB

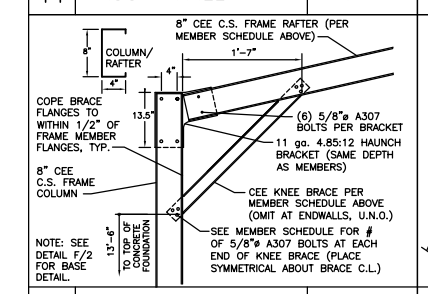

A | HAUNCH CONNECTION | DWG NO H105B

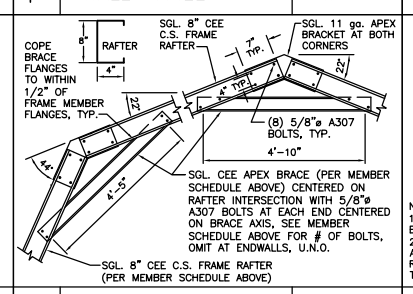
COPE BRACE FLANGES TO WITHIN 1/2" OF FRAME MEMBER FLANGES, TYP.
8"
4"
RAFTER
SGL. 8" CEE C.S. FRAME RAFTER
SGL. 11